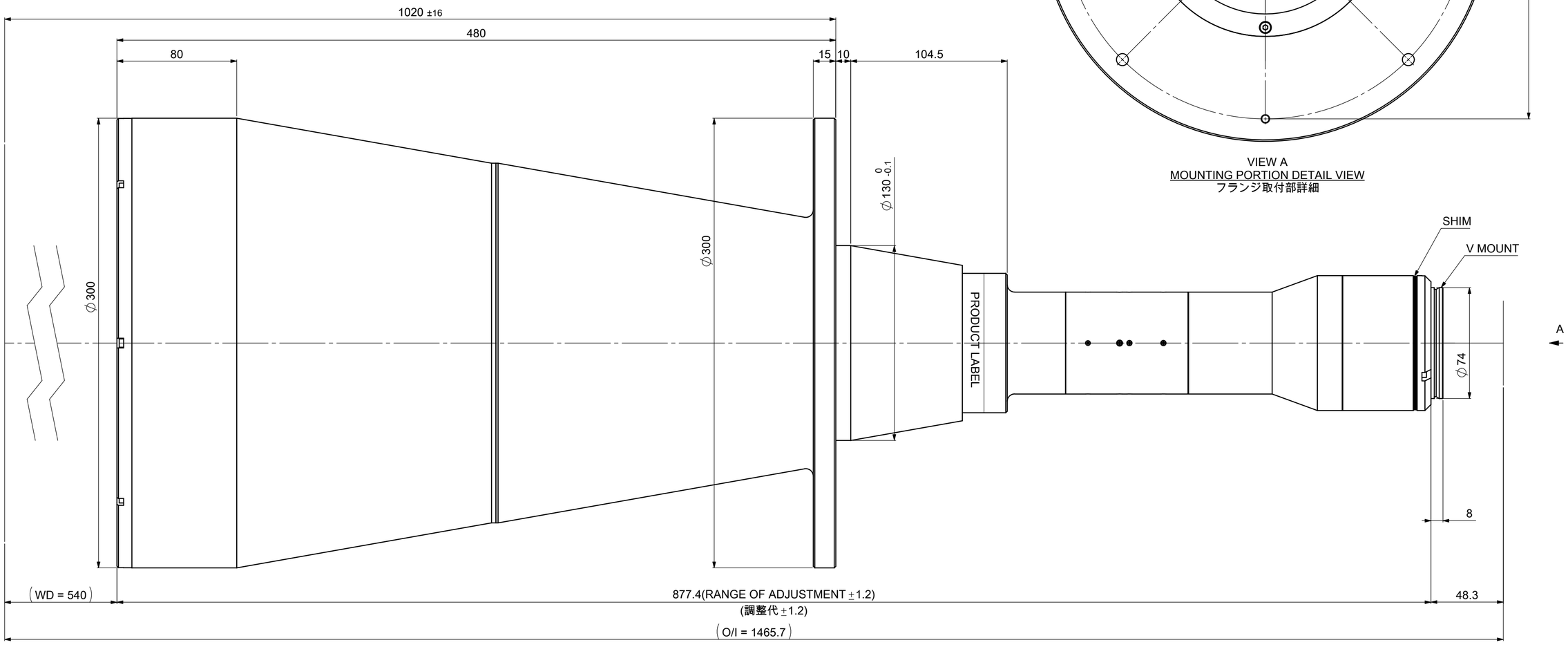


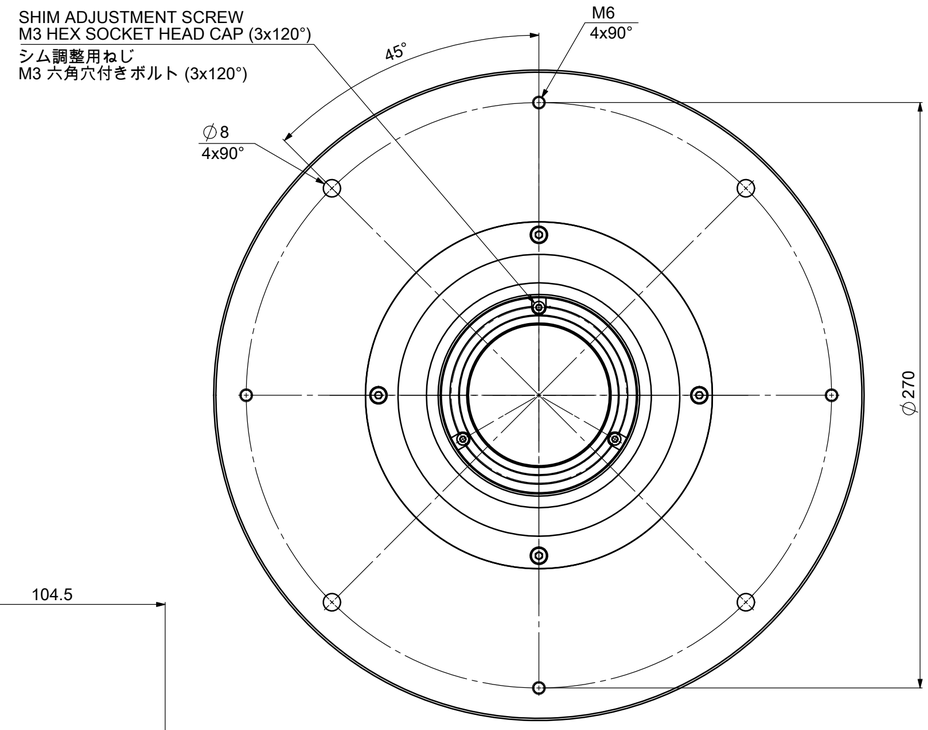


VIEW A
MOUNTING PORTION DETAIL VIEW
フランジ取付部詳細

MAGNIFICATION : 0.22x
光学倍率 : 0.22x

Model Name : MTL-26557V74-022
MORITEX CORPORATION