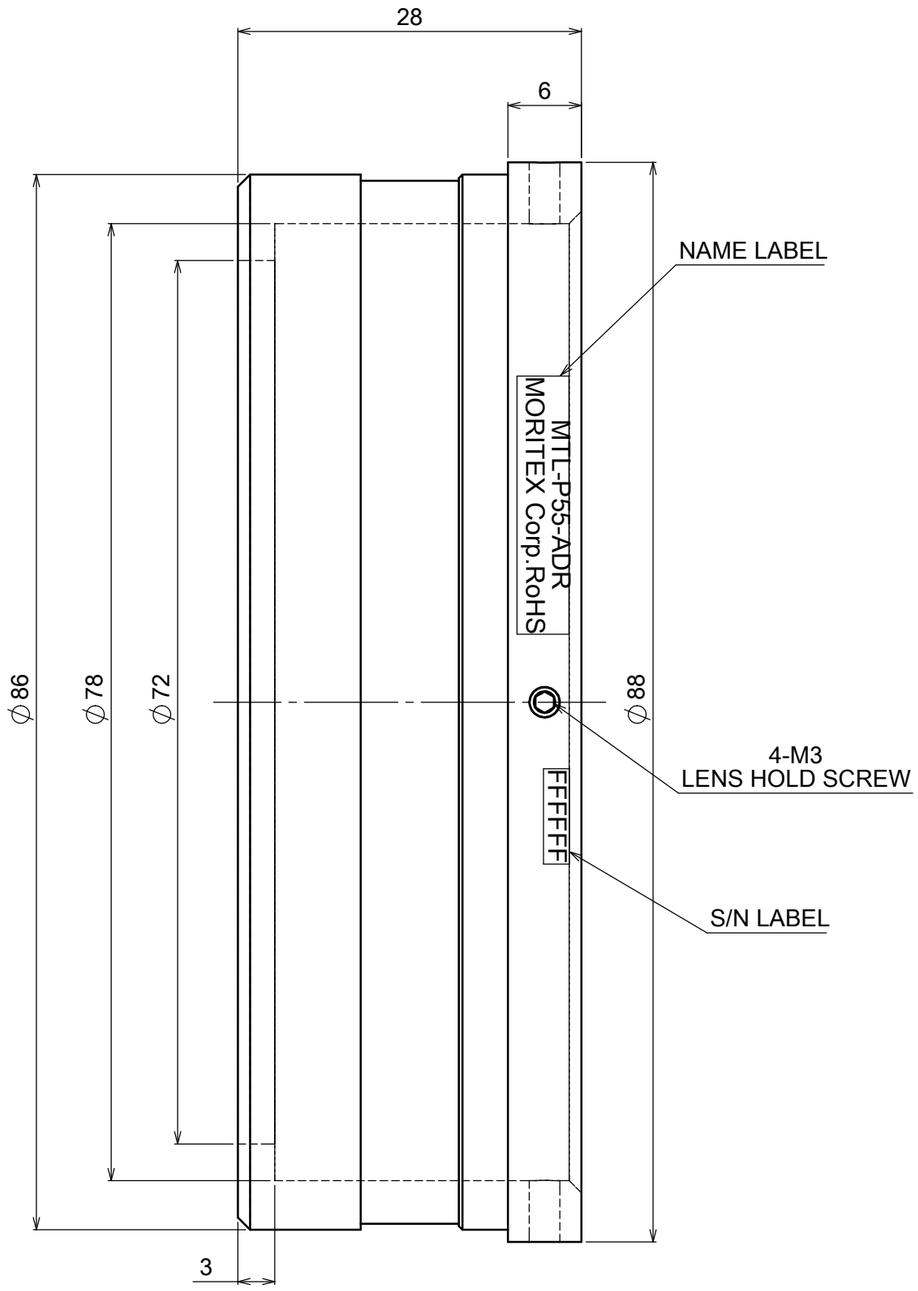

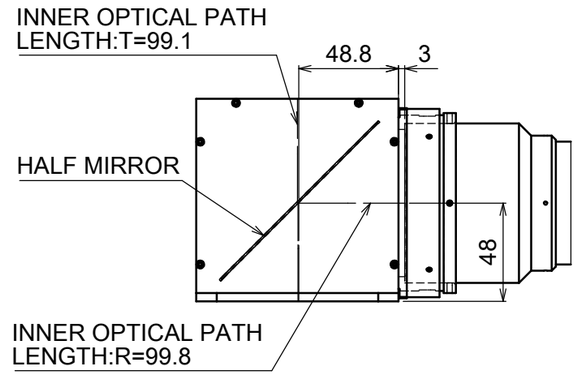

ASSEMBLY VIEW

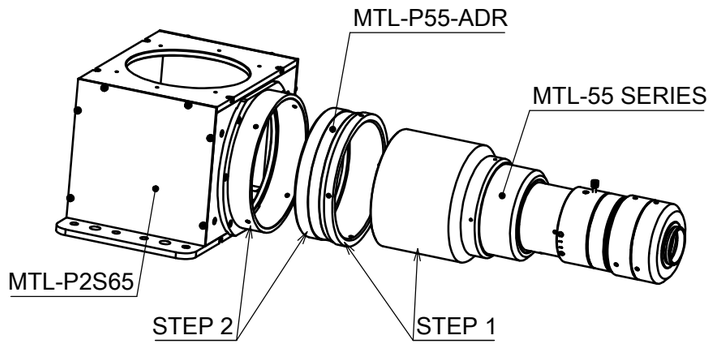

EXPLODED VIEW

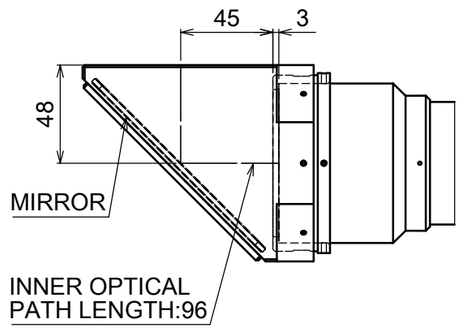

ASSEMBLY VIEW

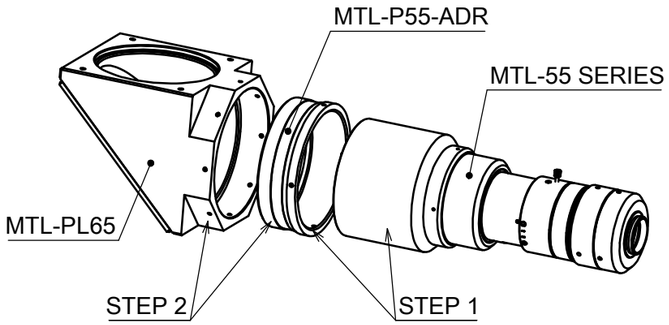

EXPLODED VIEW

ASSEMBLY SEQUENCE:
STEP1 : ASSEMBLY MTL-P55-ADR AND MTL-55 SERIES.
STEP2 : ASSEMBLY MTL-P2S65(MTL-PL65) AND MTL-P55-ADR.

INSTRUCTION FOR USE

Model Name : MTL-P55-ADR
MORITEX CORPORATION