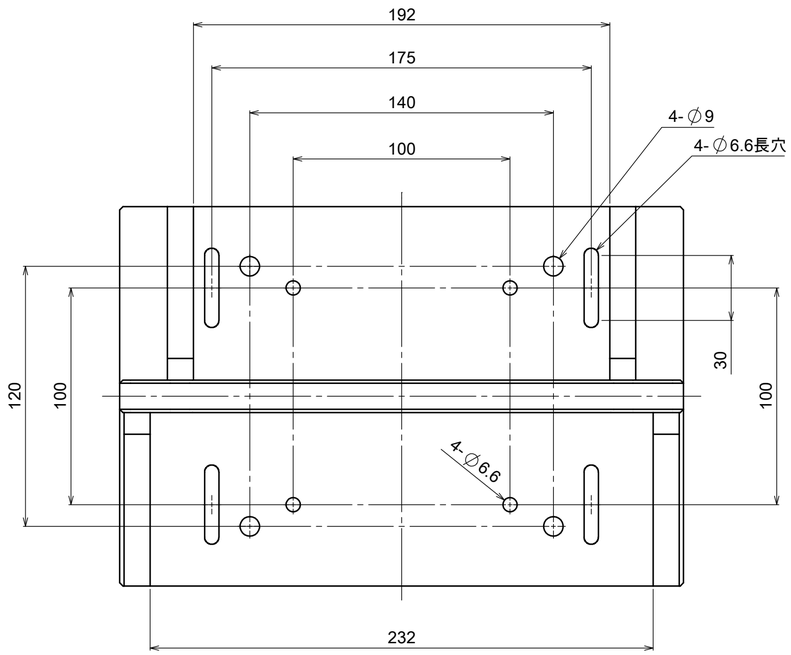

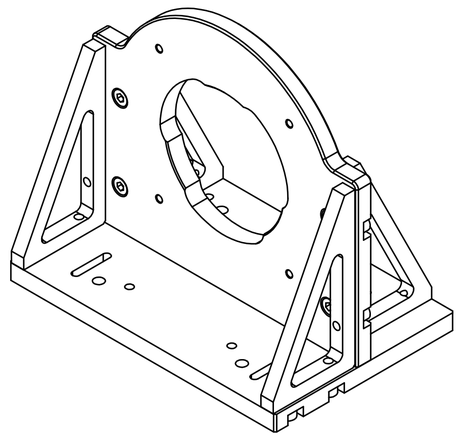

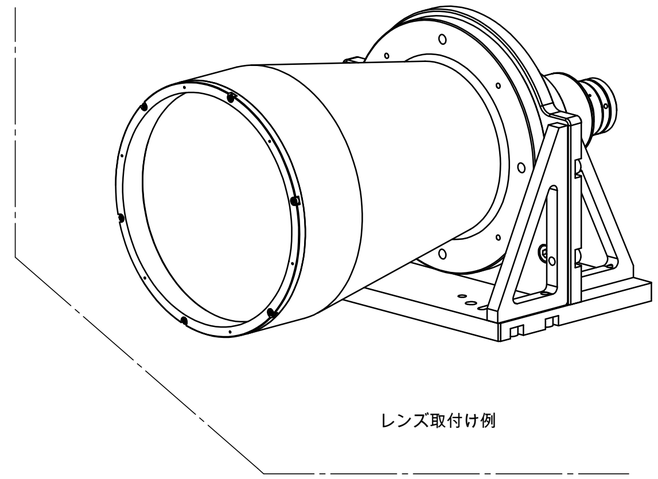

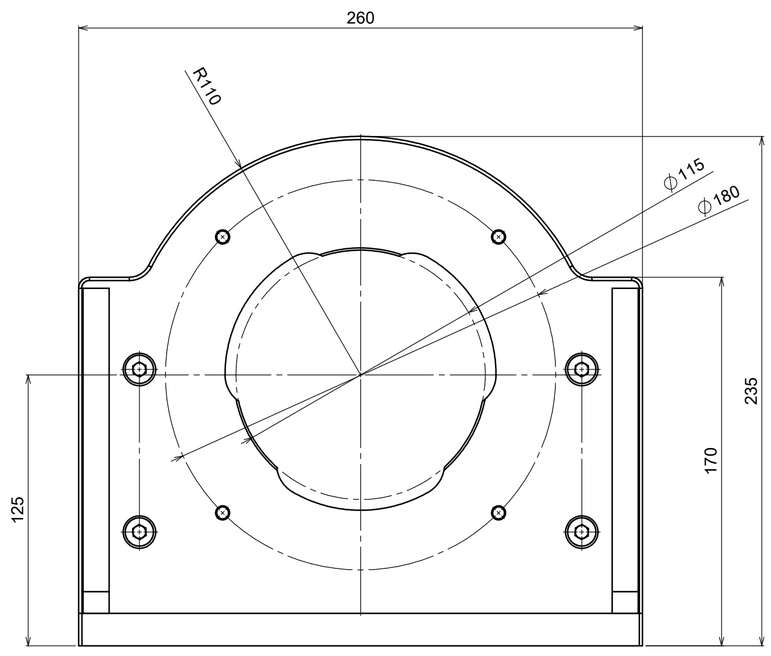

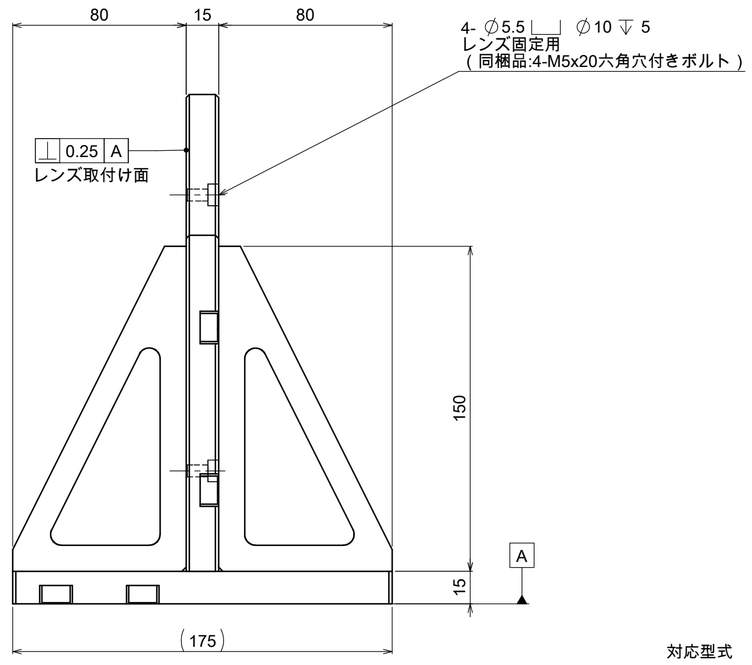

対応型式　：　MTL-180xx　MTI-180xx

Model Name : MTL-CH180
MORITEX CORPORATION